Technical sheet **PL 60**

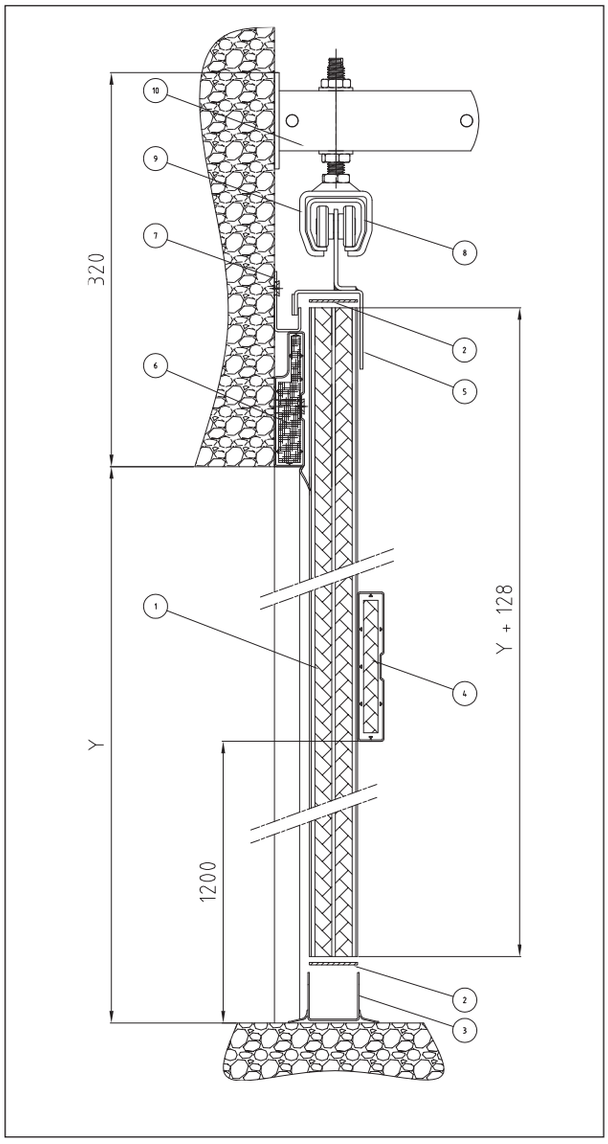

- **1** panels day width +218mm
  panels day height +128mm (panels placed vertically)
- **2** perlau 40mm/2mm (ref 7011) to be placed between the panels and the bottom seal
- **3** bottom seal (ref 2151) day width +224mm
- **4** Reinforcement profile (ref 2491): to be placed at 1m20 of the ground
- **5** panels support (ref 5551)
- **6** horizontal profile of frame (ref 2481)
  day width +224mm
- **7** horizontal angle of lintel (ref 6201)
  day width +224mm
- **8** track (ref 6501)
  (2 x day width) + 500mm
- **9** track support (ref 2571)
- **10** plate for track support (ref 2561): to be placed each 700mm

➜ use screws of 35mm for the fixation of the hinges and the roller brackets
➜ check the way of putting the panels
➜ frame has to be 40mm everywhere

FLEMA FIRE PREVENTION PRODUCTS

www.flema.be

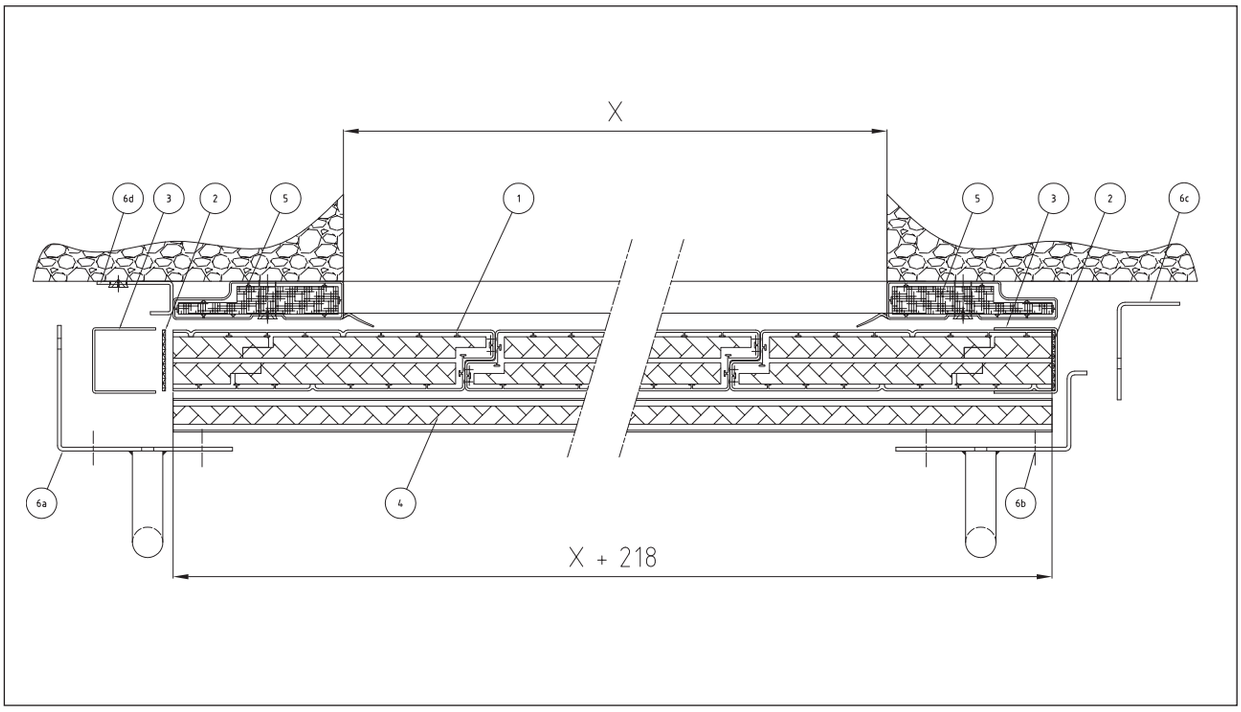

- **1** panels day width +218mm
  panels day height +128mm (panels placed vertically)
- **2** perlau 40mm/2mm (ref 7011) to be placed between the panels and the bottom seal
- **3** profile PVC 40x40 day height +132mm
- **4** vertical profile of frame (2 pcs) (ref 2481) – day height +112mm
- **5** reinforcement profile – day width +224mm
- **6** kit of handles made up of 4 pieces:
  - 6a and b are placed on the reinforcement profile
  - 6c is placed against the vertical frame closing side
  - 6d is placed against the vertical frame opening side

FLEMA sprl
rue Outre 46
7910 Anvaing
Belgium
T : +32(0)69/67.27.87
F : +32(0)69/67.27.80
www.flema.be

www.flema.be