UBAtc
Union belge pour l'Agrément technique de la Construction asbl
rue du Lombard, 42
B-1000 Bruxelles
http://www.ubatc.be

Membre de l'EOTA et de l'UEAtc
Tél. +32 (0)2 716 44 12
Fax +32 (0)2 725 32 12
info@ubatc.be

ATG Technical Approval with Certification

ATG 2781

Fire-resistant sectional doors (FR 1h) for industrial use

Sectional door PS60

Valid from 10/11/2015
until 09/11/2020

Institut de Sécurité Incendie asbl
Rue de Paris, 15
B-4020 Liège
Tel +32 (0)4 340.42.70
Fax +32 (0)4 340.42.79

ANPI - Division Certification
Rue d'Arlon 15 B-1050 Brussels
Tel +32 2 234 36 10
Fax +32 2 234 36 17

Approval holder:

FLEMA SPRL
Rue Outre 46
7910 Anvaing
Tel.: +32 69 67 27 87
Fax: +32 69 67 27 80
Website: www.flema.be
E-mail: info@flema.be

Additional characteristics included at the request of the manufacturer:

This technical approval with certificate refers only to the approval and certification concerning fire resistance and mechanical performance, as described in paragraph 6 of this approval.
Some of the doors within the scope of application described in this approval have additional characteristics, which are described in paragraph 7 of this approval. When this approval was issued, these additional characteristics were demonstrated by documents, which are also included in paragraph 7 of this approval.
These additional characteristics have not been checked by the Benor/Atg "Fire-resistant doors" office and must be demonstrated by the manufacturer.

1 Objective and scope of the Technical Approval

In compliance with Standard NBN 713.020 - Addendum 1 - "Fire resistance of construction materials" and the unified technical specifications STS 53.1 – Doors (2006 edition), the term "doors" refers to construction materials that consist of one or more panels, their frame and their connections to the main structure, which may include a transom or other fixed devices, together with suspension, closure and manoeuvring fittings.

The fire resistance of the doors has been examined, based on the results of tests conducted, according to Standard NBN 713.020 - Fire resistance of construction materials - 1968 edition – and Addendum 1 – 1982 edition. The BENOR mark is granted on the basis of all test reports, including possible interpolations/extrapolations and not only the individual reports.

The presence of the **BENOR/ATG mark** on a door certifies that the components listed in the following description and tested in compliance with NBN 713.020 indicates **fire resistance**, as shown on the BENOR/ATG label, subject to the following conditions:

- Compliance with the procedures of the General Regulations and Special Regulations for Use and Monitoring of the BENOR/ATG mark in the Passive Fire Protection sector
- Compliance with installation guidelines, which are issued with the door and included in paragraph 5 of this approval document. For this purpose, all BENOR/ATG doors supplied must be accompanied by a copy of this approval document, together with the installation guidelines.

The **durability, suitability** and **safety** of the doors have been examined, based on the results of tests conducted according to the Unified Technical Specifications STS 53.2 "Industrial Doors" (in preparation).

The technical approval is issued by UBAtc asbl. **Permission to use the BENOR/ATG mark** is granted by BOSEC, subject to the conduct of continuous checks during manufacturing and regular external checks of factory-made components by a delegate of the inspection body designated by BOSEC.

In order to obtain a satisfactory guarantee that a fire-resistant door has been correctly installed, it is recommended that a fitter is employed to install the doors, who is certified by an accredited body for this task, such as ISIB. This type of certification is issued on the basis of a training course and practical test, in which understanding and correct application of the installation guidelines are assessed.

By adding the ISIB mark, i.e. a transparent label with the certification number of the fitter, based on the following model (diameter:22 mm), which must be applied to the BENOR/ATG label, and by issuing a certification of installation, the fitter certifies that the door has been fitted according to paragraph 5 of this approval document and assumes responsibility for its installation.

By adding this label, the certified fitter agrees to have his work checked regularly by the certification body.

2 Description

2.1 Field of application

Fire-resistant sectional doors, PS 60:

- with a fire resistance rating of one hour (FR 1 h), which is based on the following test reports:

Test report numbers
Warringtonfiregent, Ottergemsesteenweg-Zuid 711, 9000 Ghent
12134A, 16071A
Efectis Nederland bv (formerly TNO, CvB)
2007-Efectis-R0310

- for the following types:
  - Sectional doors, connected by hinges
- The performance of which, according to STS 53.2 (in preparation), has been determined, based on the following reports:

Test report numbers
Centre Technique de l'Industrie du Bois
6492
SP Technical Research Institute of Sweden
0402 – CPD – 49 26 01

The doors are placed in openings created in concrete, brick or cellular concrete walls with a minimum thickness of 90 mm and satisfactory mechanical stability. Lightweight partition walls should not be used.

The various doors that make up a door are separated by a over-mantel, which must have at least the same fire resistance and mechanical stability characteristics as the partition wall, in which they are installed.

The wall openings must satisfy the conditions described in § 6.1, so that the doors can be fitted according to the conditions described in § 6.

The floor covering in these openings must hard and flat. Tiling, parquet flooring, concrete or linoleum can be used.

2.2 Marking and checks

These doors are subject to the integrated BENOR/ATG procedure, which enables the manufacturer to obtain permission to use the BENOR/ATG mark shown below.

The BENOR/ATG mark of conformity takes the form of a thin adhesive label (diameter: 22 mm), based on the following model:

These marks are numbered. They are issued to the manufacturer exclusively by Bosec.

This mark is added (in the recess) in the factory by the manufacturer on the vertical edge of the 3rd component in the lower part of the door leaf.

No marks must be displayed on the frame.

Only by displaying the above-described BENOR/ATG mark on a component can the manufacturer certify that this component complies with the relevant description included in this approval document:

Component	According to paragraph
Materials	3
Panel: description dimensions	 4.1.1. 4.1.1.6
Frame	4.1.2
Metal fittings (1)	4.1.3
Accessories (2)	-
(1): if applicable (2): if mentioned on the delivery note	

2.3 Delivery and on-site checks

Each delivery of BENOR/ATG doors must be accompanied by a copy of this approval document, so that acceptance tests can be conducted after installation.

On-site checks include:

1. Checking that the BENOR/ATG mark is present on the door panel(s)
2. Checking the conformity of the components described in the following table
3. Checking the conformity of the installation with the description included in this approval document

In particular, the checks mentioned in Sections 2 and 3 include:

Component	According to paragraph
Materials for installation	3
Dimensions	4.1.1.6
Accessories (3)	-
Fittings	6
(3): if the latter are not mentioned on the delivery note.	

2.4 Comments regarding requirements described in the specifications

The fire-resistant doors have special characteristics, which enable them to complement, when in closed position, the fire resistance characteristics of the wall, in which they are installed.

In general, this special performance can only be achieved by means of the specially designed door and depend on the care taken when the complete door is assembled (see "Delivery and on-site checks " - paragraph 2.3).

As a result, the door components (panel, frame, metal fittings, dimensions, accessories, etc.) must be selected according to the restrictions of this approval document (see "Delivery and on-site checks " - paragraph 2.3).

3 Materials (4)

The Bosec-Benor-ATG office is aware of the trade name and characteristics of each constituent component. They are checked by means of samples taken by a delegate of the inspection body, which is designated by BOSEC.

3.1 Panel

3.1.1 Panel

- "WBP" multiplex (minimum density: 450 kg/m³; wood humidity content: max. 12 %)
- PVC
- Intumescent product

3.1.2 Bottom joint

Co-extruded PVC profile (40 mm x 40 mm)

3.1.3 Upper joint

PVC profile (40 mm x 40 mm)

---

(4): The following table shows the permissible deviations for material characteristics when on-site checks are conducted:

Material characteristic	Permissible deviation
Dimensions of PVC profiles	± 1 mm

The following table shows the permissible deviations for material characteristics when checks are conducted during manufacturing:

Material characteristic	Permissible deviation
Core thickness (mm)	± 0.5 mm (based on an average of 5 measurements)
Wood moisture content (%)	± 2 % (based on an average of 5 measurements)
PVC profiles (mm)	± 0.5 mm
Section of intumescent product (mm x mm)	± 0.2 mm (based on an average of 5 measurements)
Section of frame (mm x mm)	± 0.5 mm
Density (kg/m³)	- 5 % (based on an average of 5 measurements) - 10 % (based on individual measurements)

3.1.4 Horizontal angle of the upper panel

2 mm-thick steel profile

- Placed on the upper panel
- Used to hold the door in place in the event of fire

3.1.5 Intumescent product

Perlau

3.2 Frame

3.2.1 Frame profile

- PVC
- Intumescent product
- Pine (minimum density: 450 kg/m³; wood humidity content: 8-12 %)

3.2.2 Horizontal angle of the lintel

2 mm galvanised steel profile, placed above the frame

3.3 Metal fittings

3.3.1 Cable break devices

3.3.1.1 440-600RH

Non-adjustable, rod 11 mm, rails 2'', 750 kg.

3.3.1.2 440-3''

Non-adjustable, heavy version, rod 11 mm, rails 3'', 750 kg.

3.3.1.3 SBB 3''

Non-adjustable, 1000 kg.

3.3.2 Intermediate hinge

Upper blade extended 10 mm

3.3.3 Lateral hinge

Adjustable, galvanised, thickness: 2 mm, roller 11 mm.

3.3.4 Roller

- 571: Roller, galvanised steel, 2'', rod 11 mm, L = 193 mm, 45 kg
- 572: Roller, galvanised steel, 2'', rod 11 mm, L = 118 mm, 45 kg
- 579: Roller, galvanised steel, 3'', rod 11 mm, L = 193 mm, 68 kg

3.3.5 Upper roller

Galvanised, adjustable, complete, roller 11 mm

3.3.6 Rope clamp

Galvanised, 3.0 mm, for securing stiffeners 65S and 110S.

3.3.7 Lateral end piece

- 38 E 295 F: L-shaped lateral end piece
- 38 ED 295 F: Double L-shaped lateral end piece, for doors wider than 3500 mm

3.4 Motor

3.4.1 Electric motor MFZ

Main three-phase motor (220 V or 380 V)

24 V back-up motor

3.4.2 Plate CS300

The plate built into the control box MFZ makes it possible to operate the door automatically and ensure that it is safe.

3.4.3 Safety cells

Mobile photoelectric barrier consisting of:

- 1 a pair of unit 2 cells
- 1 connection box

Makes it possible to ensure that the automatic door is safe.

Maximum movement speed 320 mm/s

3.4.4 Hydraulic motor

The hydraulic motor consists of:

- 1 hydraulic unit,
- 1 hydraulic actuator,
- 1 control unit,
- 1 pipe kit,
- 1oil reservoir.

3.5 Lightweight partition

It is not permitted to fit a door in a lightweight partition.

4 Elements (4)

4.1 Sectional door, solid, without transom

4.1.1 Panel

The panel consists of:

4.1.1.1 A series of panels

PVC panels with standard dimensions: 300 mm high and 40 mm thick

- Length can be adjusted to the opening (clear width+ 174 mm),
- the upper panel is cut lengthwise so that it can be adjusted to the height of the opening (apron = door height + 132 mm)
- the tenon of the lower panel is cut lengthwise and has a PVC bottom seal measuring 40 mm x 40 mm
- a PVC finishing profile measuring 40 mm x 40 mm is fitted to the bottom of the apron
- L-shaped end pieces are fitted on each side of every panel
- A J profile (baffle – section: 22 x 51 x 90 mm) is fitted to the upper panel.

The panels are connected by metal hinges. These hinges (70 x 64 x 2.5) are evenly distributed across the width of the door leaf, with the first hinge at a maximum of 650 mm from the edge, a maximum of 650 mm between hinges, and the last hinge a maximum of 650 mm from the edge.

4.1.1.2 Reinforcements (very wide doors)

Every second panel is fitted with a steel reinforcement, which extends across its entire width and is fitted halfway up the panel.

4.1.1.3 Filling

The panels consist of:

- A PVC coating with raised spacers on the inside and a tongue and groove joint on both sides
- A core consisting of two horizontal pine battens made from WBP Meranti multiplex fitted with tongues
- An intumescent product between the two battens and coating

4.1.1.4 Covering

Paint can be applied

4.1.1.5 Intumescent product

A strip of intumescent product (section: 40 mm x 2 mm) is fitted to:

- The edges between the panels and finishing profile,
- The upper edge of the upper panel between the panel and J profile
- and the lower edge of the lower panel

4.1.1.6 Dimensions

The dimensions of each panel must fall within the limits indicated in the following table.

Dimensions	Minimum	Maximum
Height panel	200 mm	305 mm
Width reinforcement 63x63	1000 mm 4000 mm	6000 mm 6000 mm
Thickness	40 mm	

The dimensions of the door panel must fall within the following limits:

Dimensions in mm:	Minimum	Maximum
Height	1000 mm	6000 mm
Width	1000 mm	6000 mm
Thickness without coating	40 mm	

The maximum surface of the panel is limited to 30 m².

4.1.2 Closing profiles

The frame consists of a PVC profile filled with pine and an intumescent product (width: 112 mm, thickness: 24 mm)

This profile is fastened to the wall every 600 mm throughout the height of the opening, on both sides of the latter, and throughout the width of the top of the opening.

Throughout the width of the opening, on the lintel, a steel J profile (baffle – section: 50 x 24 x 22 mm) is fitted above the PVC profile. A strip of intumescent product (section: 20 mm x 2 mm) is fitted in this steel profile.

4.1.3 Metal fittings

- The hinges between the panels are secured with 35 mm self-tapping screws.
- The ends of the panels are fastened together using adjustable lateral metal hinges.
- The upper panel is fitted with the end pieces of 2 galvanised or inox top roller brackets.
- The sectional door is raised using rollers on a rail.
- Galvanised or inox rollers are fitted in the adjustable hinge openings (roller brackets) on the ends of the panel.
- The vertical rail, which is welded against the galvanised or inox profiles, allows the door to travel on its bracket and downwards.
- The bottom panel is fitted with a cable break device, which is mounted on the panel using 35 mm self-tapping screws. The entire assembly is suspended on the galvanised flexible cable, which is fitted with a cable clamp.
- A 2'' (< 700 kg) or 3'' (> 700 kg) door fitting will be attached, depending on the weight of the door leaf (see table)
- With panels that are wider than 3500 mm, two adjustable hinges (roller brackets) are required at the panel ends, which will be fastened to the lateral double end pieces (38 ED 295 F)

4.1.4 Movement mechanism

4.1.4.1 Doors subjected to limited use

4.1.4.1.1 Always closed or bolted

- The doors function by means of a manual system. The nature and dimensions of the metal door fittings are calculated by the supplier, according to the dimensions, weight and type of opening.
- This type of door is limited to the maximum weight of 750 kg.
- This type of door is occasionally opened but remains closed most of the time.

4.1.4.1.2 Door that are always open but close in the event of fire

- The doors function by means of a manual system. The nature and dimension of the metal door fittings are calculated by the supplier according to the dimensions, weight and type of opening.
- This type of door is limited to a maximum weight of 750 kg.
- This type of door remains open at all times and only closes in the event of fire, either by triggering a electro-magnet system when a fire signal is received or if a fuse blows, due to a rise in temperature after a fire begins.

4.1.4.2 Automatic doors – normal use

- Fitted with a hydraulic system, without springs, or an electric system, with or without springs.
- The springs can be removed, if an electric motor is fitted and the motor is sufficiently powerful.

4.1.4.2.1 Hydraulic

This motorisation can operate doors weighing up to 800 kg, without any springs system. The universal "Fail Safe" system ensures that the door closes, even if the control unit fails.

The hydraulic system is the preferred solution for large dimension doors that are used intensively.

The hydraulic motor consists of:

- Hydraulic unit

  A motor/pump/electric valve assembly makes it possible to activate the jack when the door is opened and closed

  Three-phase motor 1.1 kW 4P – 1450 RPM

  3.2 cc/t or 4.5 l/min hydraulic pump working at 130 bar pressure (the pressure can be increased to 180 bar).

  Electric valve 24 VDC (NO)

- Hydraulic jack

  The jack extends to ½ the height of the door. It uses traction when the door is opened.

  Cylinder D60/50-30.

  Enables a traction force of 16000 N under 130 bar pressure.

  Fitted with 4 wall mounting brackets for installation.

  The control unit makes it possible to activate the door and is fitted with a back-up battery, in case there is a power cut.

- Pulley assembly

  1 mobile pulley, 2 wall pulleys and 1 cable tie.

4.1.4.2.2 Electric

Under normal conditions and use, the Flema fire resistant door works by means of a motor (3 phases / 400 V), which is connected to a worm drive.

In the event of fire, an additional 24 V motor, powered by a low-voltage back-up device, ensures that the door is fully closed.

The motor and drive controls form a single unit.

The MFZ type electric motor is compensated for by springs calculated according to the weight of the apron and 15000 opening cycles.

5 Manufacture

The office is informed of the manufacturing plants where the panels of the sectional doors are made, which are also listed in the control agreement with Bosec. They are labelled in the manner described in paragraph 2.2.

The doors are always supplied complete.

6 Position

The doors are stored, processed and positioned as normal internal doors, according to STS 53.1; it is recommended that the doors are only installed indoors.

6.1 The opening

The dimensions of the opening are determined, in order to position the door as described in paragraph 6.2.

The perimeter of the opening must be smooth and level across a minimum width of 15 cm on the door side.

The finish and level surface of the partition walls must always allow the door to function properly.

The level floor surface must allow the door to function with the clearance stipulated in paragraph 6.4.

6.2 Position of the frame

6.2.1 PVC frame

The frame complies with the provisions of § 4.1.2.1.

It must be placed in an opening created in concrete, brick or cellular concrete walls with a minimum thickness of 90 mm. Lightweight partition walls should not be used.

The different shutters that make up a door must be separated by a trumeau, which must have the same characteristics and stability as the wall, in which they are installed.

The frame must be square and level.

The PVC profiles are fastened to the wall at 600 mm intervals using screws and the appropriate plugs (minimum diameter: 8 mm). If the door is fitted in a cellular concrete wall, it must be secured using torpedo plugs at 600 mm intervals.

If the perimeter of the opening is not sufficiently smooth and a clearance of over 3 mm is created between the profile and the wall, it will be necessary to place rockwool between the wall and profile.

6.3 Fitting the panel

The BENOR/ATG mark of conformity is displayed on the vertical edge of the 3rd component on the lower part of the door leaf.

The fitter is not permitted to score, cut, pierce, trim or shrink, extend or enlarge the panel.

Any other necessary adjustments must be carried out by the manufacturer, in compliance with this technical approval.

The installer must add the number of panels per door to the as-laid report (delivery note, invoice, etc.)

6.4 Clearances

The maximum permissible clearances are shown in the following table.

The maximum permissible clearance between the panel(s) and floor must be respected throughout the entire thickness of the panel when the door is in closed position.

For this purpose, the floor under the door must be sufficiently level.

The latter must be prepared by companies, which are responsible for levelling floors so that the maximum difference between the lowest and highest point in the finished floor between the door (zone 1 in Fig. 3) is equivalent to the maximum permissible clearance between the panel and the floor.

Maximum permissible clearance (mm)	
Between the door leaf and frame	6
Between the horizontal angle of the upper panel and horizontal angle of the frame	6
Between the door and the floor (*)	7
(*) The floor covering must be hard and level, such as tiling, concrete, linoleum or parquet flooring.	

The clearances are measured in all places with a 10 mm wide gauge.

6.5 Commissioning

The (certified) fitter must, after installation, check that the door functions properly.

The full closure of the door, from any position, must be checked and recorded in the installation report.

6.6 Maintenance

The proper functioning of the sectional door must be checked regularly (according to the manufacturer's instructions). This maintenance, which should preferably be carried out by skilled persons (e.g. the manufacturer, fitter, etc.) is vital when it comes to guaranteeing that the doors provide a barrier against fires.

Maintenance includes:

- Checking that the door closes fully if a fire is detected,
- Checking that it moves freely inside the opening,
- Checking the anti-jamming device,
- Maintaining the moving parts and motor,
- Suspension adjustment, in order to obtain the right clearances when in closed position,
- Immediately repair or replacement by the fitter or customer of all damaged parts in the door panel or in the suspension mechanism.

6.7 Safety – personal safety recommendations

In order to ensure that all persons are safe, it is recommend that the European standard EN 13241-1 (Industrial Doors) is respected, even though it does not apply to this type of door.

General safety requirements

- Manual door
  1. Maximum closure speed in the last 1.5m: 0.3 m/s
  2. Anti-trapping device for people: maximum braking power: 400 N.
  3. Maximum opening force: 260 N
- Motorised door
  1. Maximum closure speed in the final 1.5m: 0,3 m/s
  2. Danger of persons becoming trapped:
     - Automatic shutdown per detection zone or
     - Maximum brake power: 400 N

Note: 1 and 2 also apply in the event of an emergency, fire detection and power failure.

The cable break device is always compulsory.

General fire safety requirements

- The door, which closes automatically in the event of fire, must close from any position if a fire occurs.
- The fire closing system must be controlled by a fairly sensitive detection system, so that the door closes at a fairly low temperature, in order to ensure that the door functions effectively.
- Sectional doors should not be seen as an emergency exit.

7 Performance

The performance of the above-described doors has been determined, based on the following standards:

7.1 Fire resistance

NBN 713.020 "Fire performance of building materials and products", 1968 edition and Addendum 1, 1982 edition: FR 1 h, EN 13501-2, 2003 edition: EI_1 60, provided the immediate scope of application of Standard NBN EN 1634-1, 2000 edition, is respected.

7.2 Mechanical resistance

Tests were conducted on a door with the clear dimensions of 4 m x 4 m, according to the STS 53.2 specifications (in preparation), unless otherwise mentioned.

7.2.1 Mechanical durability according to EN 12605, requirements according to EN 12604

- Number of cycles: 10000
- Maintenance required every 5000 cycles

7.2.2 Safe opening according to EN 12605, requirements according to EN 12604

The door meets these requirements (for max. 750 kg).

7.2.3 Manoeuvring forces according to EN 12445 or EN 12978, requirements according to EN 12453 or EN 12978

The door meets these requirements.

7.3 Conclusion

A PS60 sectional door, with the clear dimensions of 4 m x 4 m, is classified as follows:

FLEMA PS 60	
Performance	Class
Fire resistance	FR 1 h EI_1 60
Frequency of use	10000 cycles (maintenance: 5000 cycles)
Safe opening	The door meets these requirements.
Manoeuvring forces	The door meets these requirements.

Wind resistance according to EN 12444, requirements according to EN 12424	**Class 5**
Air permeability according to EN 12427, requirements according to EN 12426	Class 2
Water permeability according to EN 12489, requirements according to EN 12425	Class 0 (npd)
Heat resistance according to EN 12428	2.6 W/(m²K)
Dangerous substances	Meets the requirements.

8 Additional performance

8.1 Mechanical performance according to EN 13241-1

A PS60 sectional door, with the clear dimensions of 3 m x 3 m, is classified as follows:

Materials

Description	Image	Diagram
Leaf Ref. text: 3.1		
Panel Ref. text: 3.1.1 Ref. Flema: 3101, 3102, 3103, 3104, 3151, 3152, 3153, 3154	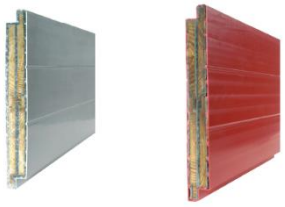	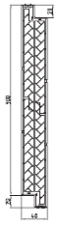
Bottom joint Ref. text: 3.1.2 Ref. Flema: 2151, 2152, 2153		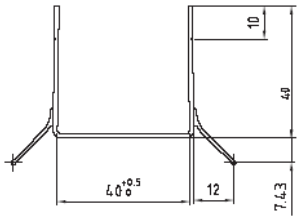
Upper joint Ref. text: 3.1.3 Ref. Flema: 2181, 2182		
Horizontal angle of the panel Ref. text: 3.1.4 Ref. Flema: 6252		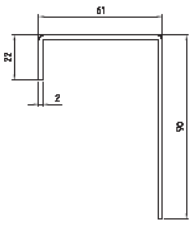
Intumescent product Ref. text: 3.1.5 Ref. Flema: 7010, 7011		
Frame Ref. text: 3.2		

Fire-resistant frame profile Ref. text: 3.2.1 Ref. Flema: 2481, 2482, 2483		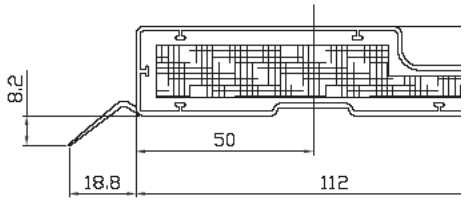
Horizontal angle of the lintel Ref. text: 3.2.2 Ref. Flema: 6201		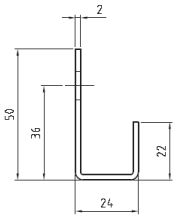
Metal fittings Ref. text: 3.3		
Cable break devices 440-600 Ref. text: 3.3.1.1 Ref. FlexiForce: 440-600		
Cable break devices 440-3'' Ref. text: 3.3.1.2 Ref. FlexiForce: 440-3''		
Cable break devices SBB 3" Ref. text: 3.3.1.3 Ref. Canimex Torque Force: SBB 3"		
Intermediate hinge Ref. text: 3.3.2 Ref. FlexiForce: 450HZ+10		
Lateral hinge Ref. text: 3.3.3 Ref. FlexiForce: 450CZ+10		
Roller Ref. text: 3.3.4 Ref. FlexiForce: 571, 572, 579		

Upper roller bracket Ref. text: 3.3.5 Ref. FlexiForce: 415CZ		
Rope clamp Ref. text: 3.3.6 Ref. FlexiForce: 1046		
Lateral end piece Ref. text: 3.3.8 Ref. FlexiForce: 38E295F, 38ED295F		
Motor Ref. text: 3.4		
Electric motor Ref. text: 3.4.1 Ref. Flema: 4591		
Hydraulic motor Ref. text: 3.4.4 Ref. Flema: 4592, 4593, 4594, 4595, 4596, 4597, 4598, 4599		

Fig. 1: Vertical section

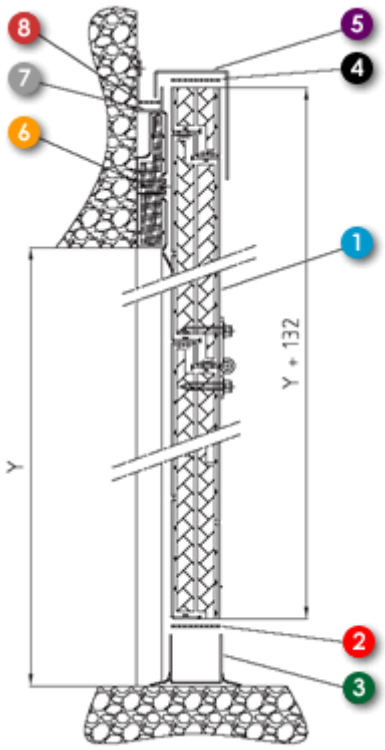

1. Panels with clear width+ 174 mm
   Panels with clear height+ 132 mm

2. perlau 40 mm x 2 mm (ref 7011) to be placed:
   - on each end of the panel
   - between the panel and the bottom joint
   - between the panel and the horizontal angle of the lintel

3. bottom joint (ref 2151) with clear width + 180 mm

4. perlau 40 mm x 2 mm to be placed:
   - on each end
   - between the panels
   - between the panels

5. horizontal angle of the panel (ref 6252)
   clear width + 180 mm

6. horizontal frame profile (1 p.) (ref 2481)
   clear width +224 mm

7. horizontal angle of lintel (ref 6201)
   clear width + 154 mm

8. perlau 20 mm x 2 mm (ref 7010)
   clear width + 154 mm to be placed in the horizontal angle of the lintel

Fig. 2: Horizontal section

1. panels with clear width +174 mm
   panels with clear height +132 mm

2. perlau 40 mm/2 mm (ref 7011) to be placed:
   - on each end of the panel
   - between the panel and the bottom joint
   - between the panel and the horizontal angle of the lintel

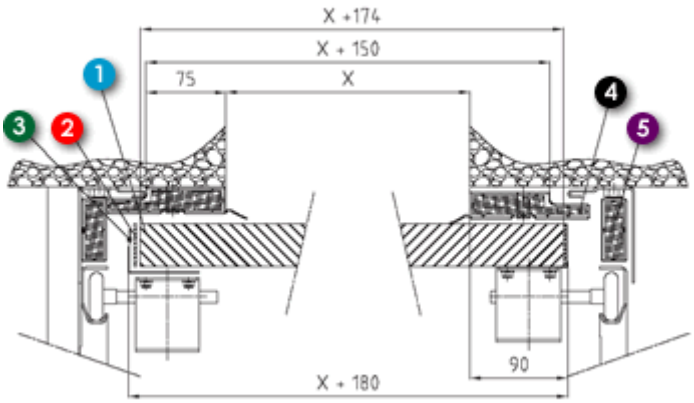

3. Flexi-Force lateral end piece

4. vertical frame profile (ref 2481) (2 p.)
   - clear height +112 mm

5. angle bracket (ref 2471) - clear height +140 mm

Fig. 3: Zones

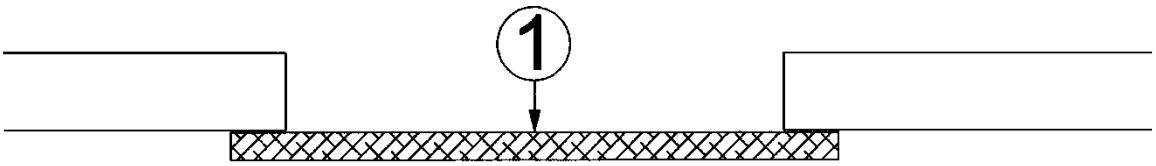

9 Conditions

A. This technical approval exclusively covers the product mentioned on the cover page of the Technical Approval.

B. Only the approval holder and, if applicable, the distributor may assert rights based on the Technical Approval.

C. The approval holder and, if applicable, the distributor are not permitted, in any way, to use the name of the UBAtc, its logo, the ATG mark, the Technical Approval or the approval reference for product evaluations that fail to comply with the Technical Approval or products, kits or systems, including their properties or characteristics, which do not form the object of the Technical Approval.

D. Information provided in any way by the approval holder, distributor or a recognized contractor or by their representatives to (potential) product users (e.g. for clients, contractors, architects, consultants, designers, etc.), which is specified in the Technical Approval may not be incomplete or contradict the content of the Technical Approval or information referred to in the Technical Approval.

E. The approval holder is at all times obliged to provide UBAtc, the approval operator and the certification operator with prompt and prior notification of any adjustments made to raw materials and products, installation instructions and/or the manufacturing and installation processes and equipment. Depending on the information communicated, the UBAtc, the approval operator and the certification operator will judge whether it is necessary to adjust the Technical Approval.

F. The Technical Approval is based on the available technical and scientific knowledge and information, complemented by information provided by the applicant and completed by an approval examination, which takes account of the specific nature of the product. Nevertheless, users remain responsible for selecting the product as specified in the Technical Approval, for specific uses intended by the user.

G. The intellectual property rights associated with the Technical Approval, including the copyright, belong exclusively to the UBAtc.

H. Any references to the Technical Approval shall be accompanied by an ATG reference (ATG 2781) and the validity period.

I. The UBAtc, the approval body and the certification body cannot be held responsible for any damage or adverse consequences suffered by third parties (e.g. the user) that result from the failure of the approval holder or distributor to respect the provisions of Article 10.

UBAtc npo is an approval body which is member of the European Union for Technical Approval in Construction (UEAtc, zie www.ueatc.eu) en dat aangemeld werd door de FOD Economie in het kader van Verordening (EU) n°305/2011 en lid is of the European Organisation for Technical Assessments (EOTA, see www.eota.eu). Certification bodies designated by UBAtc npo operate in compliance with a system that may be accredited by BELAC (www.belac.be).

This Technical Approval has been published by UBAtc, under the responsibility of the approval operator ANPI, and based on a favourable opinion by specialist group "PROTECTION PASSIVE CONTRE L'INCENDIE ", expressed on 13 June 2013.

In addition, the certification operator, ANPI, confirmed that the production process meets the conditions for certification and that a certification agreement has been signed by the ATG holder.

Date of issue: 30 December 1899.

This ATG supersedes ATG 09/2781, valid from 22/01/2009 to 21/01/2012. Changes from previous versions are listed below:

Changes from previous version

For UBAtc, declaration of the validity of the approval process

Peter Wouters, director

Benny De Blaere, director

For the approval and certification operator

Alain Verhoyen, general manager

Bart Sette, director

This technical approval shall remain valid, provided that the product, its manufacture and all related processes:

- are maintained, in order to achieve, as a minimum, the examination results specified in this Technical Approval;
- are continuously monitored by the certification operator, which confirms that the certification continues to be valid;

If these conditions are no longer met, the Technical Approval shall be suspended or withdrawn and the Technical Approval shall be removed from the UBAtc website. Technical approvals are regularly updated. It is recommended to always use the version published on the UBAtc website (www.ubatc.be).

The most recent version of the Technical Approval may be consulted using the adjacent QR code.

Belgische Unie voor de technische goedkeuring in de bouw — Union belge pour l'Agrément technique de la construction

ATG 2781

UBAtc BUtgb